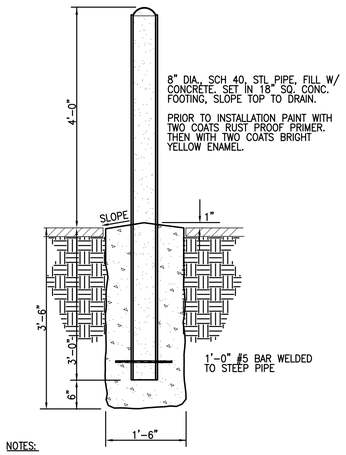

NOTES:

1. INSTALLATION TO BE COMPLETED PER MANUFACTURER'S SPECIFICATION.
2. THIS DRAWING IS PROVIDED FOR PLANNING PURPOSES. REFER TO MANUFACTURER'S INSTALLATIONS FOR CONSTRUCTION DETAILS.
3. DRAWING NOT TO SCALE.
4. DO NOT USE FOR CONSTRUCTION.

1 ALUM. PICKET FENCE DETAIL
SCALE: 3/8" = 1'-0"

LEGAL DESCRIPTION:

THE WEST 1/2 OF THE EAST 1/2 OF THE SOUTHEAST 1/4 OF THE SOUTHEAST 1/4 OF THE NORTHWEST 1/4 OF SECTION 27, TOWNSHIP 48 SOUTH, RANGE 42 EAST, BROWARD COUNTY. FLORIDA, LESS THE EASTERLY 8 FEET AND LESS THE SOUTHERLY 35 FEET THEREOF FOR ROAD RIGHT-OF-WAY PURPOSES, AND LESS:

A PARCEL OF LAND LYING IN THE SE 1/4 OF THE NW 1/4 OF SECTION 27, TOWNSHIP 48 SOUTH, RANGE 42 EAST MORE PARTICULARLY DESCRIBED AS FOLLOWS:

COMMENCE AT THE CENTER OF SAID SECTION; THENCE PROCEED WESTERLY ALONG THE SOUTH LINE OF SAID SE 1/4 OF THE NW 1/2 FOR A DISTANCE OF 205 FEET; THENCE PROCEED NORTHERLY ALONG A LINE PERPENDICULAR TO SAID SOUTH LINE, A DISTANCE OF 35 FEET TO THE NORTH RIGHT-OF-WAY LINE OF NW 10th STREET, SAID POINT BEING THE POINT OF BEGINNING; THENCE CONTINUE NORTHERLY ALONG SAID PERPENDICULAR LINE A DISTANCE OF 92 FEET; THENCE PROCEED WESTERLY ALONG A LINE WHICH IS 127 FEET NORTH OF, AND PARALLEL TO, THE SOUTH LINE OF SAID SE 1/4 A DISTANCE OF 30 FEET; THENCE PROCEED SOUTHERLY ALONG A LINE PERPENDICULAR TO THE LAST DESCRIBED COURSE, A DISTANCE OF 92 FEET TO A POINT ON THE NORTH RIGHT-OF-WAY LINE OF NW 10TH STREET; THENCE PROCEED EASTERLY ALONG SAID NORTH RIGHT-OF-WAY LINE A DISTANCE OF 30 FEET TO THE POINT OF BEGINNING.

TOGETHER WITH:

THE EAST 1/2 OF THE EAST 1/2 OF THE SOUTHEAST 1/4 OF THE SOUTHEAST 1/4 OF THE NORTHWEST 1/4 OF SECTION 27, TOWNSHIP 48 SOUTH, RANGE 42 EAST, BROWARD COUNTY. FLORIDA, LESS THE SOUTH 25 FEET AND THE EAST 50 FEET FOR ROAD RIGHT-OF-WAY PURPOSES.

TOGETHER WITH: THE EASTERLY 8 FEET TOGETHER WITH THE SOUTHERLY 35 FEET OF THE WEST 1/2 OF THE EAST 1/2 OF THE SOUTHEAST 1/4 OF THE SOUTHEAST 1/4 OF THE NORTHWEST 1/4 OF SECTION 27, TOWNSHIP 48 SOUTH, RANGE 42 EAST, BROWARD COUNTY. FLORIDA, LESS THE COUNTY ROAD FOR RIGHT-OF-WAY PURPOSES.

5 LEGAL DESCRIPTION
SCALE: N.T.S.

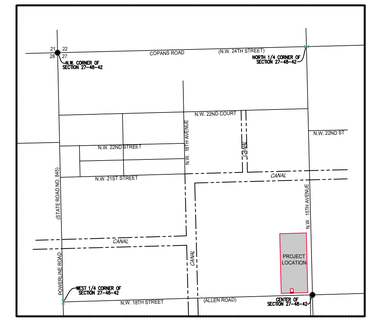

4 LOCATION MAP
SCALE: N.T.S.

NORTH

6 BOLLARD PROTECTIVE DEVICES
SCALE: N.T.S.

ALL FENCE DETAILS SHOWN ON THIS SHEET ARE FOR REFERENCE ONLY. A SEPARATE PERMIT IS REQUIRED FOR FENCE.

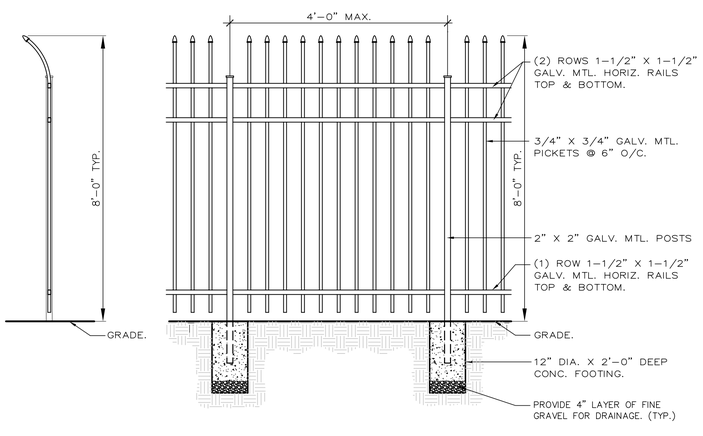

ALUM. PICKETS FENCE DETAIL

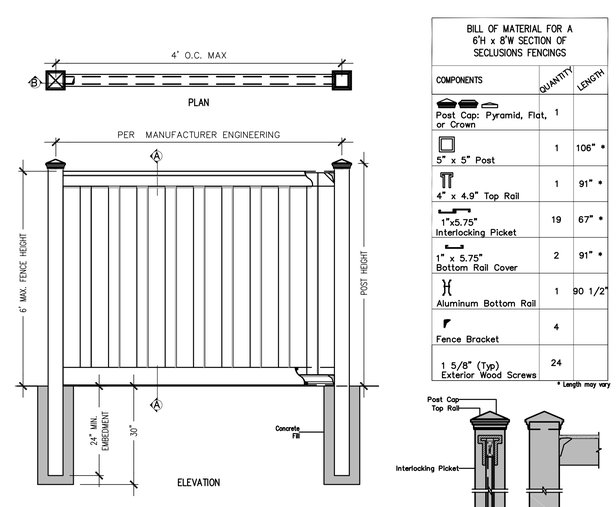

BILL OF MATERIAL FOR A 6'H x 8'W SECTION OF SECLUSIONS FENCINGS

COMPONENTS	QUANTITY	LENGTH
Post Cap: Pyramid, Flat, or Crown	1	
5" x 5" Post	1	106" *
4" x 4.9" Top Rail	1	91" *
1"x5.75" Interlocking Picket	19	67" *
1" x 5.75" Bottom Rail Cover	2	91" *
Aluminum Bottom Rail	1	90 1/2"
Fence Bracket	4	
1 5/8" (Typ) Exterior Wood Screws	24	

* Length may vary

NOTES:

1. INSTALLATION TO BE COMPLETED PER MANUFACTURER'S SPECIFICATION.
2. THIS DRAWING IS PROVIDED FOR PLANNING PURPOSES. REFER TO MANUFACTURER'S INSTALLATIONS FOR CONSTRUCTION DETAILS.
3. DRAWING NOT TO SCALE.
4. DO NOT USE FOR CONSTRUCTION.

VINYL FENCE DETAILS

Gustavo J Carbonell

Digitally signed by Gustavo J Carbonell
Date: 2022.03.14 19:53:58 -04'00'

2 VINYL FENCE DETAIL
SCALE: N.T.S.

DRC SITE DATA TABLE

SITE INFORMATION :	
PROPERTY ADDRESS:	1801 NW 15 AVENUE & NW 18 STREET, POMPANO BEACH, FL
PZ # :	20-12000040
BLDG PERMIT # :	BP20-00009525
ZONING AND PROPERTY INFORMATION:	
LAND USE DESIGNATION:	GENERAL INDUSTRIAL
ZONING DESIGNATION:	I-1
CURRENT USE OF PROPERTY:	VACANT
PROPOSED USE OF PROPERTY:	TRUCK TERMINAL
FLOOD ZONE:	X
BASE FLOOD ELEVATION:	N/A PROPOSED EL. 12.5' NAVD
UTILITIES AND SERVICES:	
WATER PROVIDER:	CITY OF POMPANO BEACH
WASTE WATER PROVIDER:	CITY OF POMPANO BEACH
SOLID WASTE PROVIDER:	PRIVATE HAULER
RECYCLING PROVIDER:	PRIVATE HAULER
SITE DATA:	
GROSS SITE (SQ.FT. / ACREAGE):	207,135 SQ.FT. (OR) 4.76 ACRES
NET SITE (SQ.FT./ ACREAGE):	179,775 SQ.FT. (OR) 4.13 ACRES

	SQ.FT.	%
SIZE AREA (SQ.FT. / ACREAGE):	179,775 SQ.FT. (OR) 4.13 ACRES	100.00 %
VEHICULAR USE AREA (VUA):	125,832 SQ.FT.	70.00 %
DUMPSTER AREA:	254 SQ.FT.	0.14 %
WALKWAY & BIKE AREA:	778 SQ.FT.	0.43 %
LANDSCAPE AREA:	52,911 SQ.FT.	29.43 %
	REQUIRED	PROVIDED
LOT WIDTH :	100.00' MIN.	284.91'
PERVIOUS AREA:	20 % MIN. OF LOT AREA	52,911 SQ.FT.= 29.43 %
IMPERVIOUS AREA:	N/A	179,775 - 52,911 = 126,864 SQ.FT.
BIKE SPACES:	4 BIKE PER 10 PARKING SPACES (NO MORE THAN 20)	20 BIKE SPACES

3 SITE DATA & SETBACK TABLE
SCALE: N.T.S.

REVISION	BY:
1 03-14-2022	M.J.G.

GUSTAVO J. CARBONELL, P.A.
Architect and Planner
1457 N.E. 4th AVE.
Ft. Lauderdale, Florida, 33304
(954) 462-6565
Member American Institute of Architects
FLORIDA REGISTRATION
AR NO. 0007957
AA NO. 26001131

" IOV SPEC. POMPANO "
TRUCK TERMINAL
1801 NW 15th Ave.
1Pompano Beach Fl. 33069

STATE OF FLORIDA
GUSTAVO J. CARBONELL
AR 0007957
REGISTERED ARCHITECT
AA 26001131

DRAWN	M.J.G.
CHECKED	G.J.C.
DATE	AUGUST 2021
SCALE	AS NOTED
JOB NO.	21-032
SHEET	SP-2
OF	1 OF 3 SHEETS

DRC
PZ20-12000040
4/20/2022